MALE END VIEW	FEMALE END VIEW
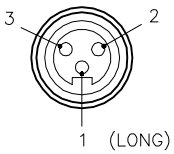	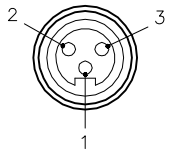
1 = GREEN/YELLOW 2 = BLACK 3 = WHITE	1 = GREEN/YELLOW 2 = BLACK 3 = WHITE
power fast.	power fast.

SPECIFICATIONS	
CONTACT CARRIER MATERIAL	PVC
MOLDED HEAD MATERIAL/COLOR	PVC/BLACK
CONTACT MATERIAL/PLATING	BRASS/GOLD
COUPLING NUT MATERIAL/FINISH	STAINLESS STEEL/PASSIVATED
RATED CURRENT [A]	21.0 A
RATED VOLTAGE [V]	600 V
OUTER JACKET MATERIAL/COLOR	TPE/BLACK
NUMBER OF CONDUCTORS [AWG]	3x14 AWG
CONDUCTOR INSULATION MATERIAL	PVC
TEMPERATURE RATING	−40°C to +90°C (−40°F to +194°F)
PROTECTION CLASS	NEMA 1,3,4,4X,6P,12 & IECIP67,IP68,IP69,IP69K
CABLE RATINGS	UL: TC−ER DIRECT BURIAL, 90C, 600V CSA: CIC/TC, 90C, 600V

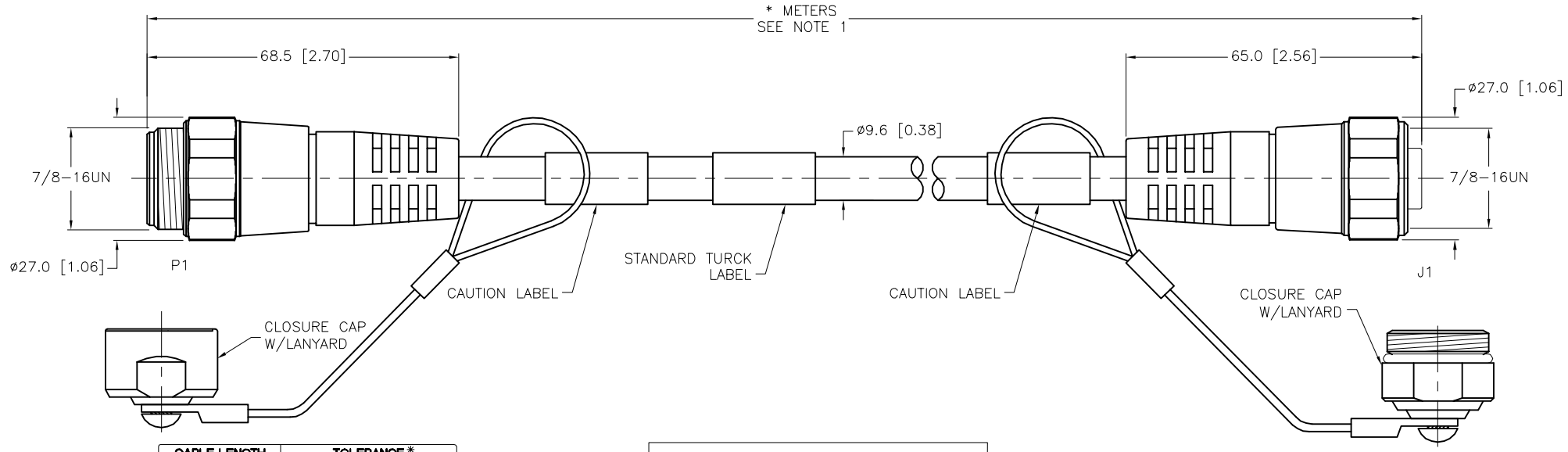

CABLE LENGTH	TOLERANCE *
ALL LENGTHS	+ 4% (OR 50mm) OF LENGTH − 0% (OR 0mm) OF LENGTH WHICHEVER IS GREATER
STRIP LENGTH	**TOLERANCE ***
0−7mm	±0.5mm
8−29mm	±1.0mm
30−49mm	±2.0mm
50−69mm	±3.0mm
70−100mm	±4.0mm
OVER 100mm	±5.0mm
* UNLESS OTHERWISE SPECIFIED	

CAUTION:
RISK OF ELECTRICAL SHOCK
DO NOT DISCONNECT UNDER LOAD

SOURCE DRAWING - FOR REFERENCE ONLY

NOTES:

1. "*" INDICATES CABLE LENGTH IN METERS. CONTACT TURCK TO ORDER SPECIFIC LENGTHS.

2. "/S1599" DESIGNATES ATTACHED MATING CLOSURE CAP TO CORDSET ENDS.

REV	DESCRIPTION	BY	DATE	ECO NO.
G	UPDATE PROTECTION CLASS	CBM	04/13/21	76628

RELATED DOCUMENTS
1.
2.
3.
4.

3RD ANGLE PROJECTION

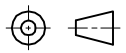

THIS DRAWING IS CONFIDENTIAL AND THE PROPERTY OF TURCK INC. USE OF THIS DOCUMENT WITHOUT WRITTEN PERMISSION IS PROHIBITED.

TURCK

3000 CAMPUS DRIVE
MINNEAPOLIS, MN 55441
1−800−544−7769
(763) 553−7300
(763) 553−0708 fax
www.turck.us

MATERIAL: SEE SPECIFICATIONS

FINISH: SEE SPECIFICATIONS

ALL DIMENSIONS DISPLAYED ON THIS DRAWING ARE FOR REFERENCE ONLY

CONTACT TURCK FOR MORE INFORMATION

DRFT: NF | DATE: 01/29/15
APVD: K.Y. | SCALE: 1=1.3

UNIT OF MEASUREMENT
MILLIMETER [INCH]
DO NOT SCALE THIS DRAWING

DESCRIPTION: P−PWR−RSV RKV 34−1198−*M/S1599

IDENTIFICATION NO.:

REV: G

FILE: 777034593

SHEET 1 OF 1